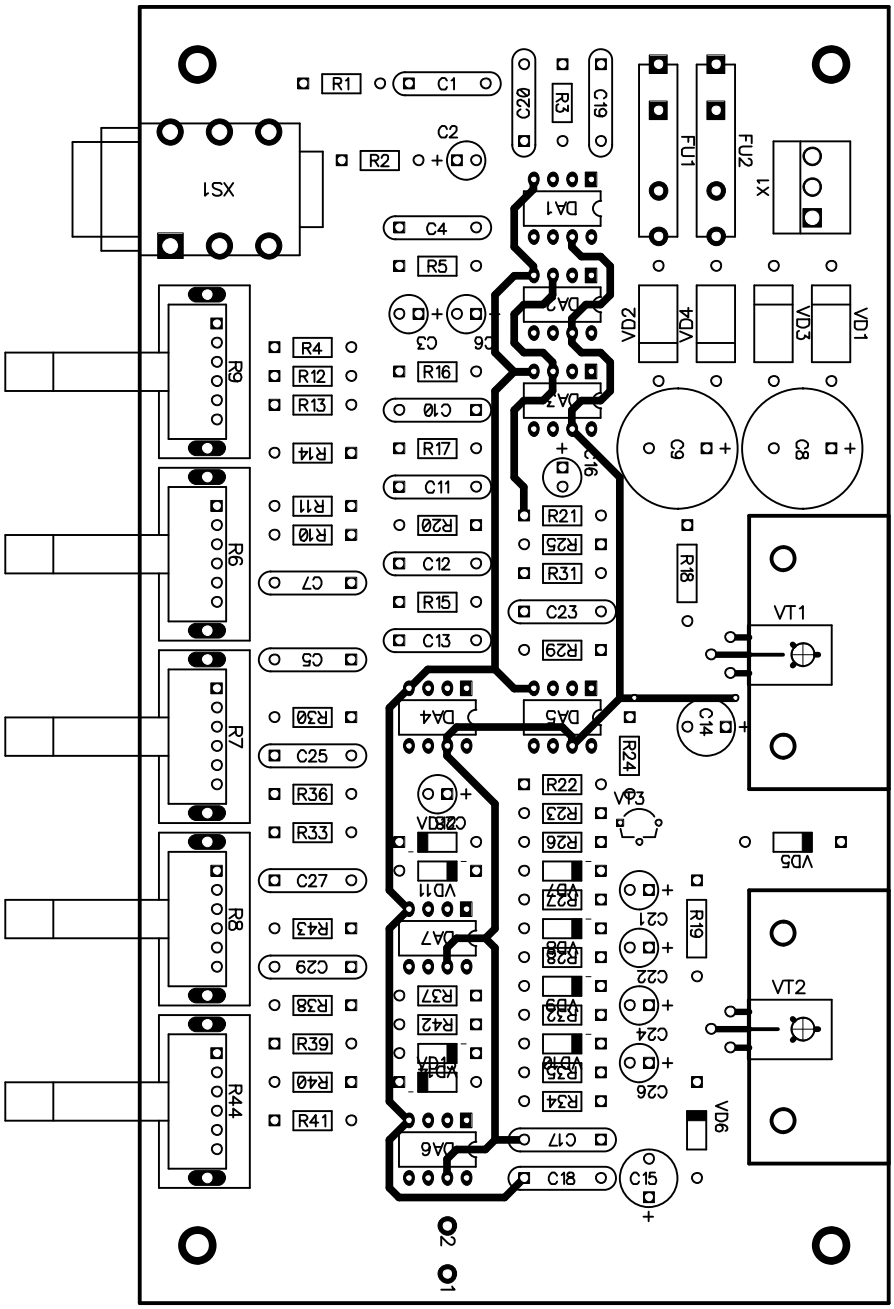
VD1
VD3
VD4
VD2
FU2
FU1
X1
C8
C9
VT1
VT2
VD5
VD6
C14
C15
R18
R19
R24
VT3
C16
C19
C20
R3
C1
R1
C2
R2
XS1
C4
R5
C3
C6
R4
R12
R13
R16
C10
R17
C11
R20
C12
R15
C13
R21
R25
R31
C23
R29
R22
R23
R26
R27
R28
R32
R35
R34
C21
C22
C24
C26
C17
C18
R9
R6
R7
R8
R44
C7
C5
R30
C25
R36
R33
C27
R43
C29
R38
R39
R40
R41
R37
R42
C28
VD11
DA1
DA2
DA3
DA4
DA5
DA6
DA7
2
1